# Team Guava

# Final Presentation

## Fall ‘24

# Team Guava **Introductions**

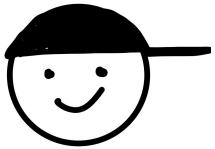

**Jayden Oravainen**
Junior - 496
3rd Semester
EE - EP

**Jordan Okumura**
Senior - 496
3rd Semester
EE - EP

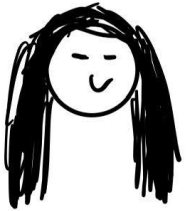

**Korie Takamoto**
Junior - 396
2nd Semester
EE - EP

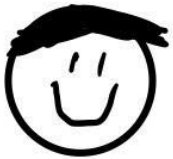

**Andy Hernandez**
Junior - 396
2nd Semester
EE - SDS

# Presentation Overview

- Block Diagram
- Project Goals
- Progress Made
- Bare Guava
- Wind Sensor
- Problems Encountered
- Future Work
- Gantt Chart
- Questions

# Block Diagram

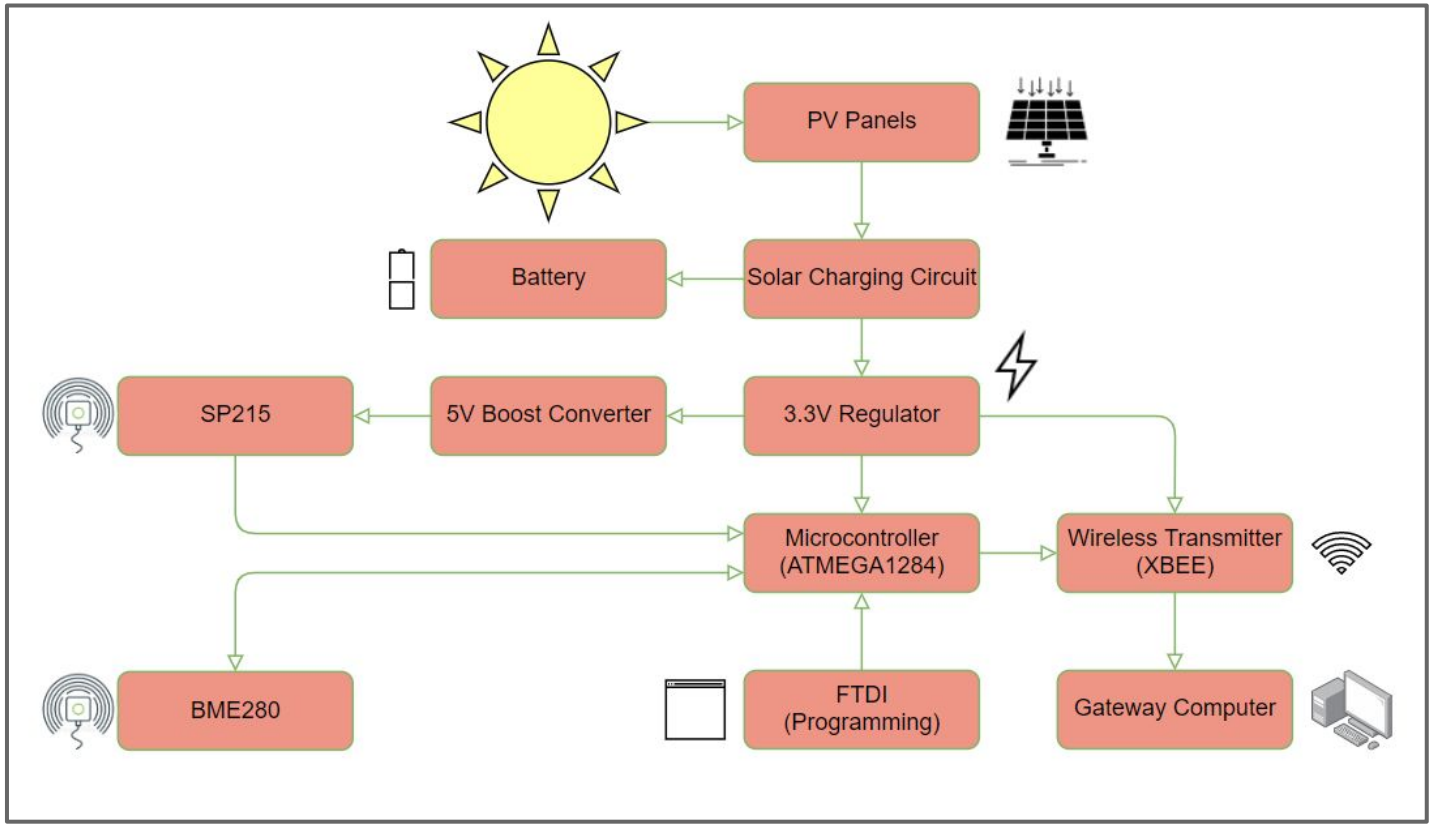

# REV E1

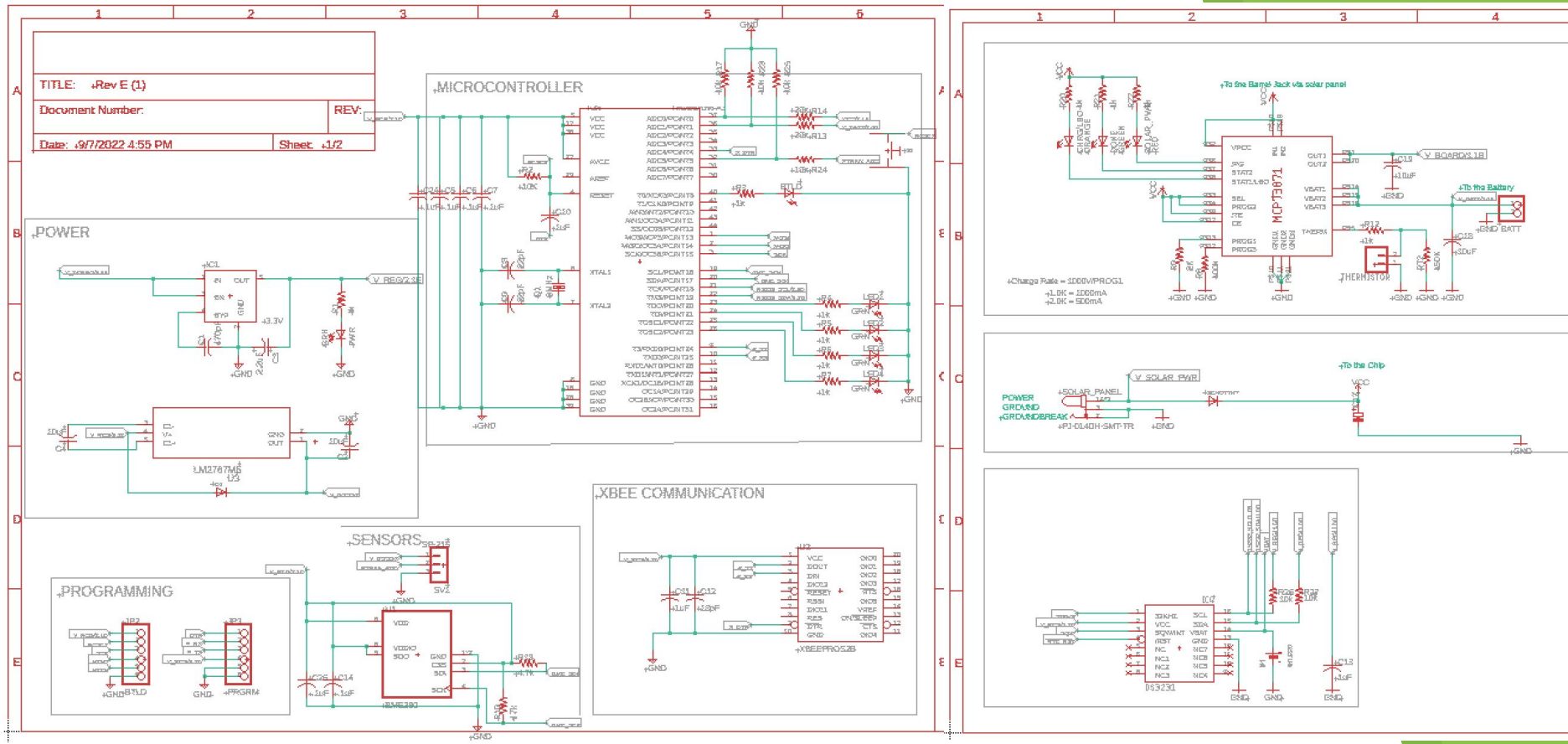

TITLE: Rev E (1)
Document Number:
REV:
Date: 9/7/2022 4:55 PM
Sheet: 1/2
MICROCONTROLLER
POWER
SENSORS
PROGRAMMING
XBEE COMMUNICATION
LM2767MS
BME280
XBEEPROS2B
MCP73871
DS3231
THERMISTOR
To the Barrel Jack via solar panel
To the Battery
To the Chip
V_BOARD/3.1B
V_SOLAR_PWR
POWER
GROUND
GROUNDBREAK

# REV E1 KiCad (Not finalized)

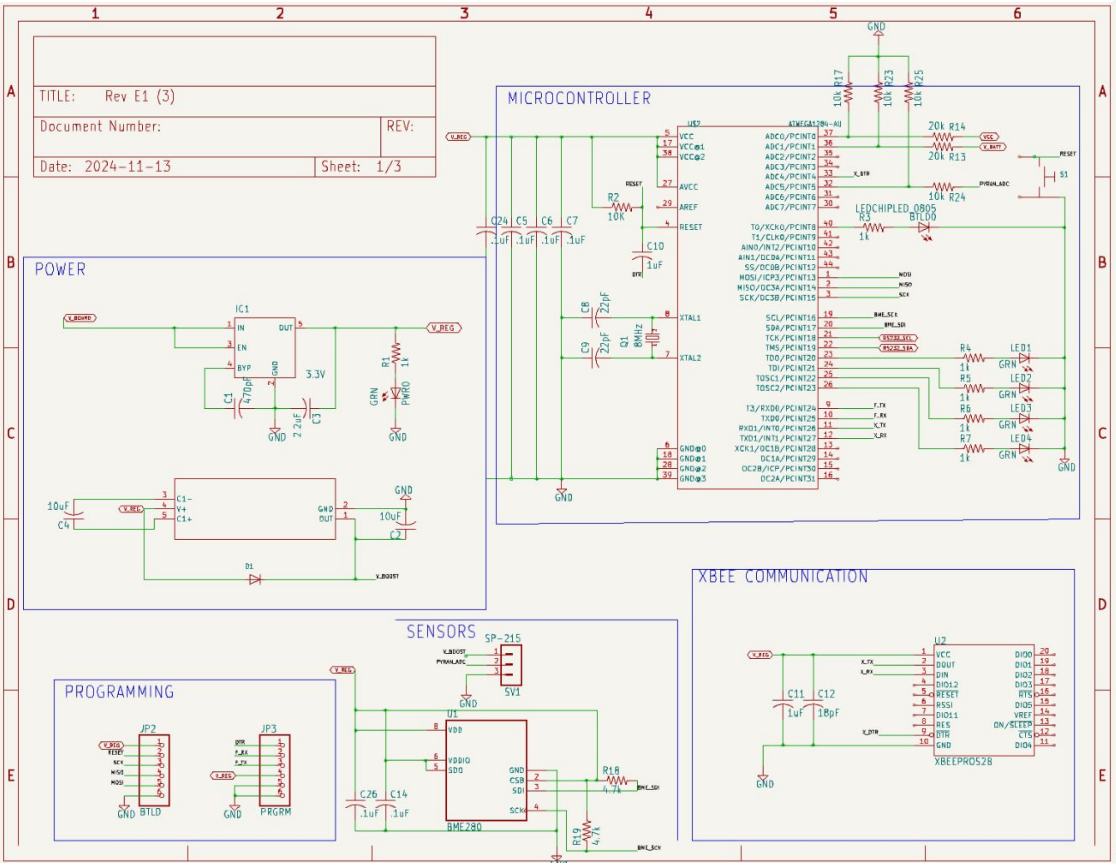


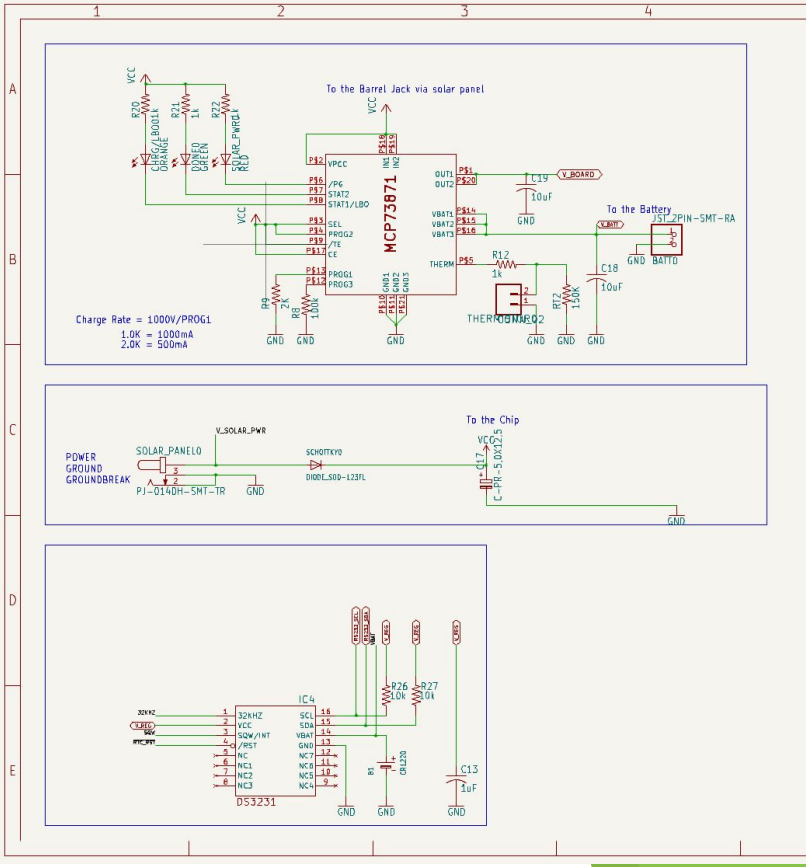

# REV E1

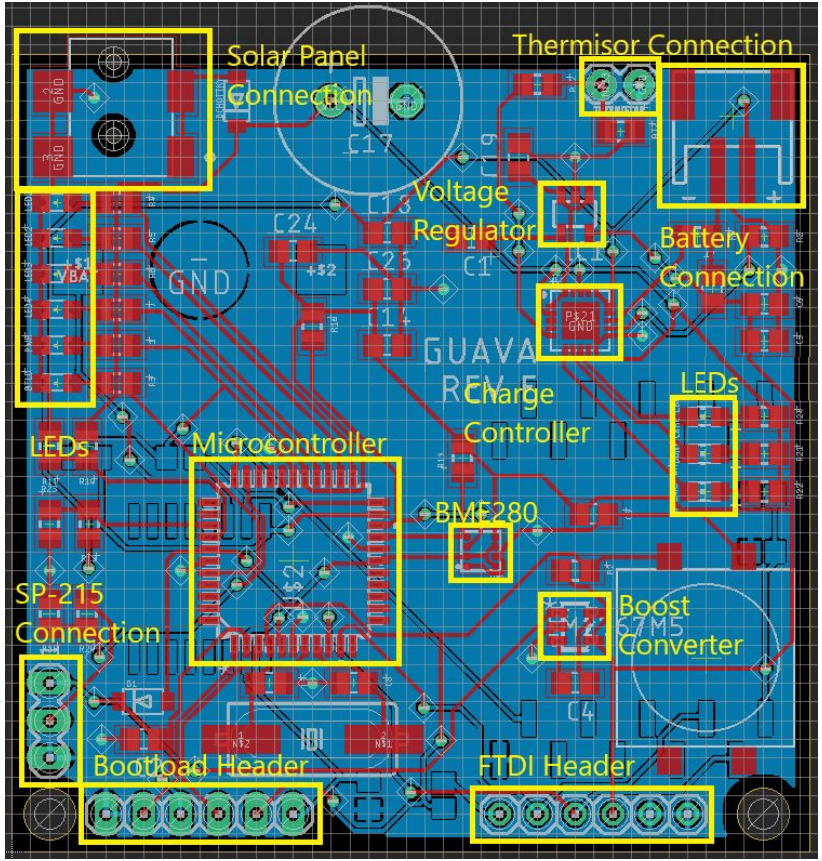
Solar Panel Connection
Thermisor Connection
Voltage Regulator
Battery Connection
LEDs
Charge Controller
LEDs
Microcontroller
BME280
SP-215 Connection
Boost Converter
Bootload Header
FTDI Header

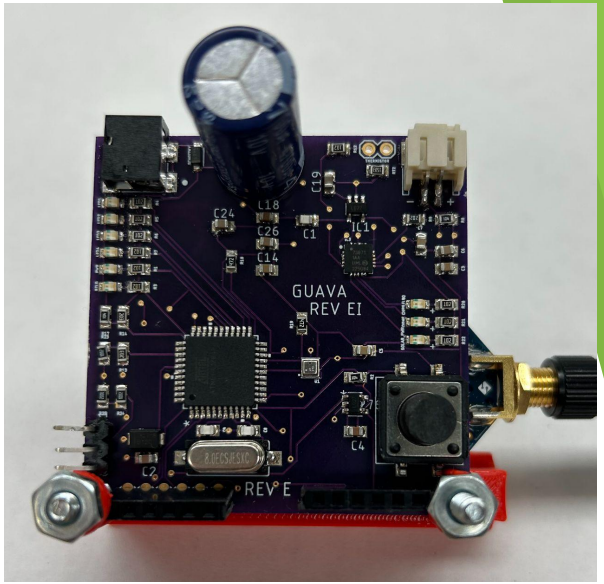
GUAVA
REV E1
REV E

# Project Goals

Design & fabricate a self-sustaining environmental sensor module that will collect meteorological data

- On-board Andy & Korie
- Verify all operations of the board
- Create a Guava Network
- Research & Develop potential wind sensor

# Progress Fall 2024

- Ordered new PCBs and other parts
- Troubleshoot last semester's boards
- Reconstructed Bare Guava
- Bootloaded Bare Guava
- Watched KiCad tutorials
- Converted old EAGLE schematic to KiCad
- Started the process of designing a new board
- Ready to deploy TWO weatherboxes

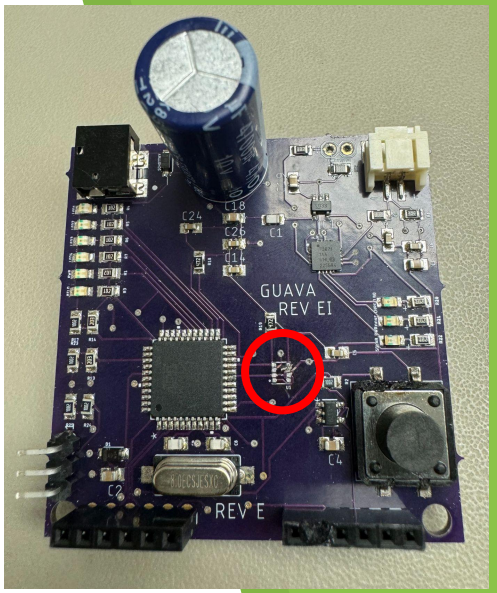

# Bare Guava

- Reconstructed Bare Guava
- Attempted to bootload
- Failed bootloading
  - Trouble with wiring
  - Couldn’t understand schematic

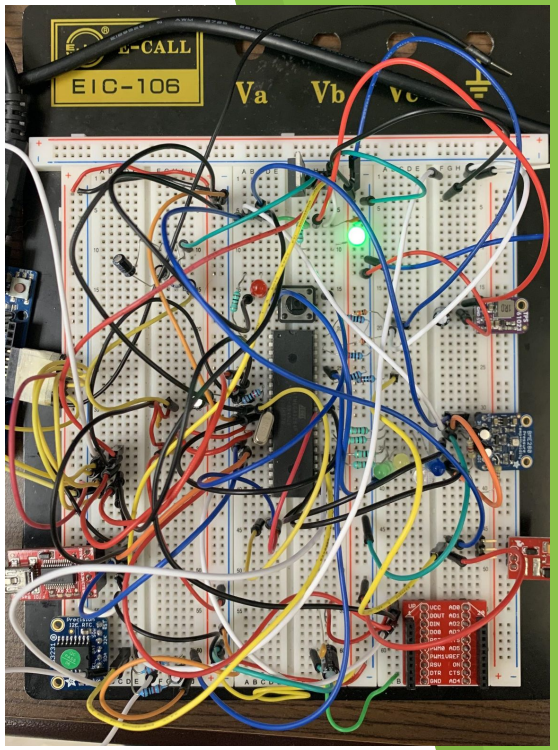

# Integrating Wind Sensor

- Cup Anemometer
  - Input Voltage Requirement: 7-24V
    - Additional battery pack or Voltage Boost Converter
  - ADC (Analog to digital converter) on ATMEGA1284P
    - Wind Sensor has an output voltage of 0.4V-2V
    - Can translate transmitted voltage into a wind speed

# Problems Encountered

- Lack of boards
  - Waiting on EE Office to confirm board order
- Bare Guava not functional
  - Wiring is incorrect
  - Failed to bootload and program
- EAGLE to Kicad conversion issues
  - Unfamiliar with Kicad
  - Further revisions needed

# Future Work

- Guava Network
  - Populate 6 new PCBs
  - Make sure 3 are functioning
- Development
  - Reconstruct Bare Guava
  - Develop new board design
- Other
  - Coordinate with facilities to deploy two weatherboxes

# GUAVA FALL 2024

| Week | 1 | 2 | 3 | 4 | 5 | 6 | 7 | 8 | 9 | 10 | 11 | 12 | 13 | 14 | 15 |
|---|---|---|---|---|---|---|---|---|---|---|---|---|---|---|---|
| Date | 9/09-9/13 | 9/16-9/20 | 9/23-9/27 | 9/30-10/04 | 10/07-10/11 | 10/14-10/18 | 10/21-10/25 | 10/28-11/01 | 11/04-11/08 | 11/11-11/15 | 11/18-11/22 | 11/25-11/29 | 12/02-12/06 | 12/09-12/13 | 12/16-12/20 |
| **Presentations** | | | | | | | | | | | | | | | |
| Proposal | | | | | | | | | | | | | | | |
| PDR | | | | | | | | | | | | | | | |
| CDR | | | | | | | | | | | | | | | |
| Final | | | | | | | | | | | | | | | |
| **Reports** | | | | | | | | | | | | | | | |
| Mid-Semester | | | | | | | | | | | | | | | |
| Final | | | | | | | | | | | | | | | |
| | | | | | | | | | | | | | | | |
| **Review** | | | | | | | | | | | | | | | |
| **Parts Order and Billing** | | | | | | | | | | | | | | | |
| **Test & Debug** | | | | | | | | | | | | | | | |
| **Development** | | | | | | | | | | | | | | | |
| **Build** | | | | | | | | | | | | | | | |
| **Deploy/ Maintenace** | | | | | | | | | | | | | | | |

# Gantt Chart

# Fall 2024

# Thank you!

## Any Questions?