EE 496 Dragon Fruit Final Presentation

Brian Chan
Garrett Young
Advisor: Anthony Kuh
December 5, 2015

Agenda

- Goals
- Block Diagram
- Final Status
- Problems
- Future Improvements

Goals

- Research parts and design a PCB
- Get a working prototype by the end of November
  - Accurate readings from each of the sensors
  - Low power consumptions
  - Communication between module and server

Block Diagram

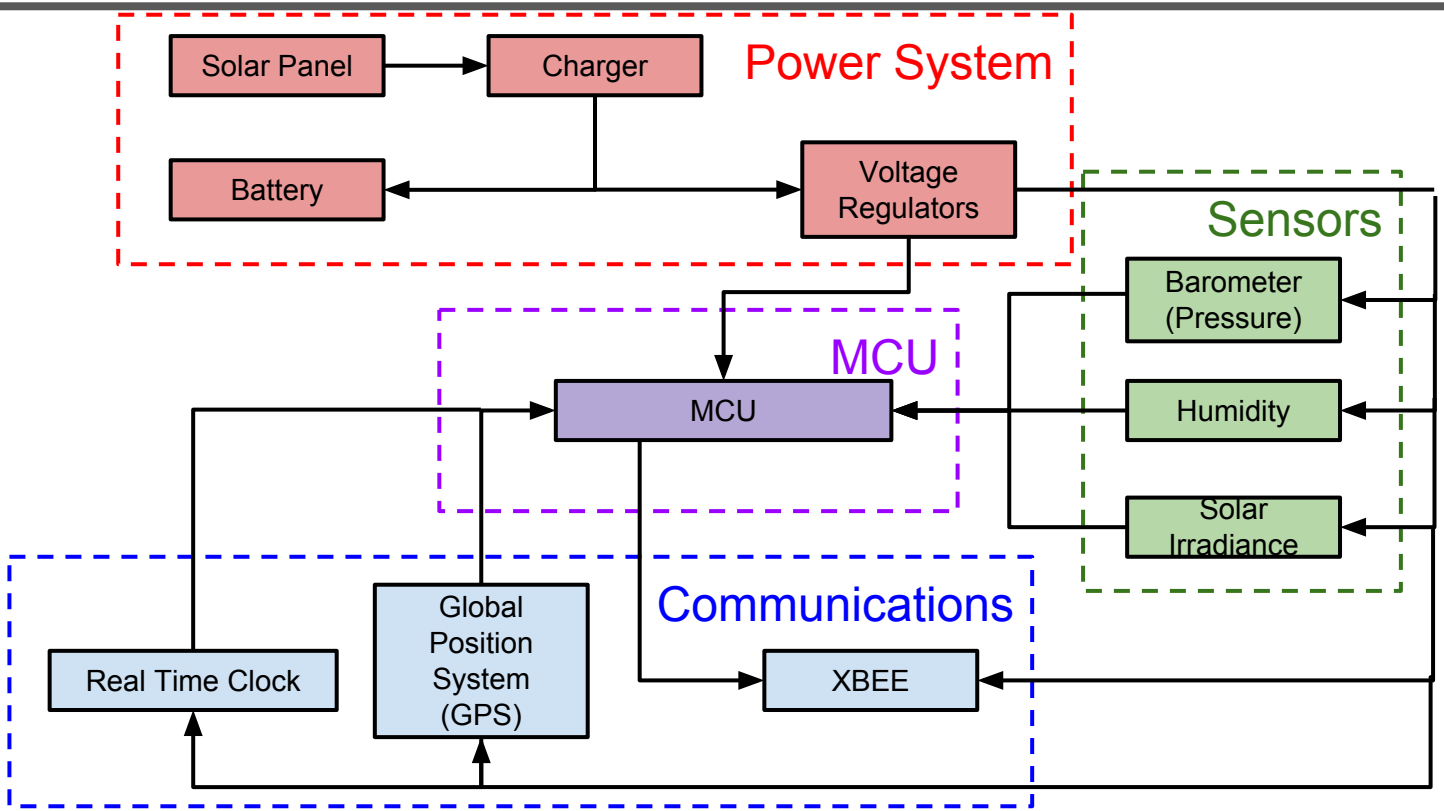

Final Status

- Completed Final Draft of documentation
  - BOM (Bill of Materials)
  - Power Budget
- Finished layout of PCB
  - Two board design - main board, sensor board
  - Two versions of the board
    - 2-layer & 4-layer

Final Status [cont.]

- BOM
  - Total Cost of the system $320
  - Excludes housing, PCB fabrication
  - Dragon Fruit Bill of Materials
- Power Budget
  - Dragon Fruit Power Budget

Battery Type	Runtime (Hours)	Runtime (Days)
6600mAh Li-ion 3.7V	141.15	5.88
15600mAh Li-ion 3.7V	333.63	13.9

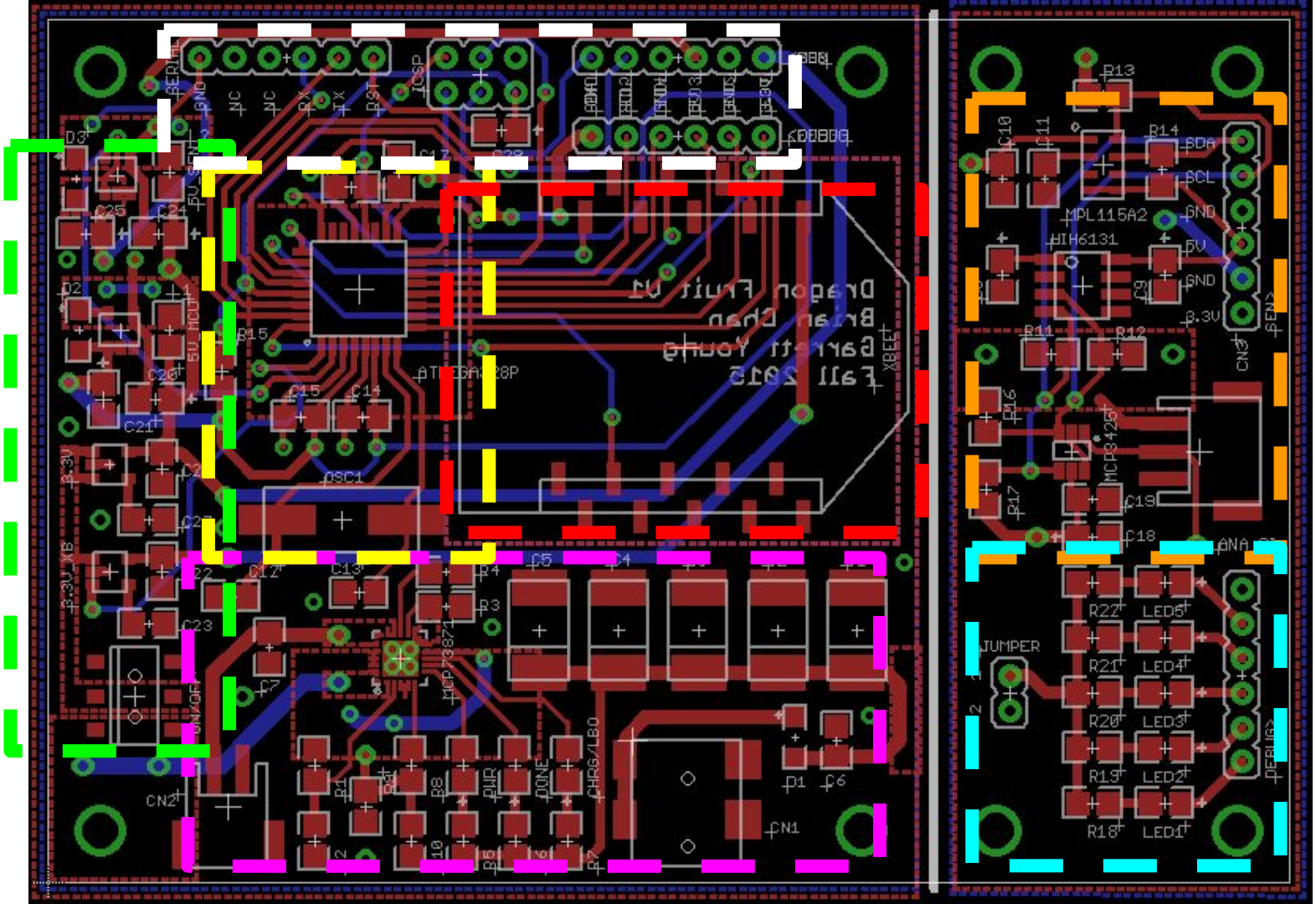
Dragon Fruit V1
Brian Chan
Garrett Young
Fall 2015
ATMEGA328P
OSC1
MCP73871
MPL115A2
HIH6131
MCP3425
JUMPER
CN1
CN2
CN3
XBEE
ICSP
SDA
SCL
GND
5V
3.3V
LED1
LED2
LED3
LED4
LED5
R13
R14
R11
R12
R16
R17
R18
R19
R20
R21
R22
C10
C11
C19
C18
C25
C24
C20
C21
C15
C14
C12
C13
C23
C7
C5
C4
C6
D1
D2
D3
R15
R4
R3
R1
R8
R5
R7
PWR
DONE
CHRG/LBO

Problems encountered

- Time constraints
- Power distribution
  - Required boost regulator
  - Incorrect resistor value for charging chip
- Changes in schematic
  - Redesigned board to accommodate

Future Goals/Improvements

- Possible new sensors
  - Add Real Time Clock and GPS
  - Incorporate anemometer
- Design Housing
- Deploy working sensor modules by end of Spring Break

Plans for Next Semester

- Test and debug fabricated board
- Start testing power subsystem and sensors
- Start designing the housing

Special Thanks To...

- Advisor: Dr. Anthony Kuh
- Mentors: Christie Obatake, Kenny Luong, Jonathan Liang
- Cranberry: Brandon Amano, Kim Pee Castro
- Xbee: Raydan Bala, Ernesto Lorenzo
- Firmware: Scott Nakashima, Ryan Walser

Questions?